Service Manual

DN7204

EVI PRO AUDIO GROUP
Klark Teknik Building,
Walter Nash Road, Kidderminster,
Worcestershire DY11 7HJ,
England

Tel:(01562)741515 Fax:(01562)745371

To obtain maximum performance from this precision electronic product, please study these instructions carefully. Installing and operating the DN7204 is not complicated, but the flexibility provided by its operating features merits familiarization with its controls and connections.

After you have unpacked the unit:

Save all the packing materials - they will prove valuable should it become necessary to transport or ship this product.
Please inspect this unit carefully for any signs of damage incurred during transportation. It has undergone stringent quality control inspection and tests prior to packing and left the factory in perfect condition.
If, however, the unit shows any signs of damage, notify the transportation company without delay. Only you, the consignee, may institute a claim against the carrier for damage during transportation.
If necessary, contact your supplier or as a last resort, your Klark Teknik importing agent, who will fully co-operate under such circumstances.

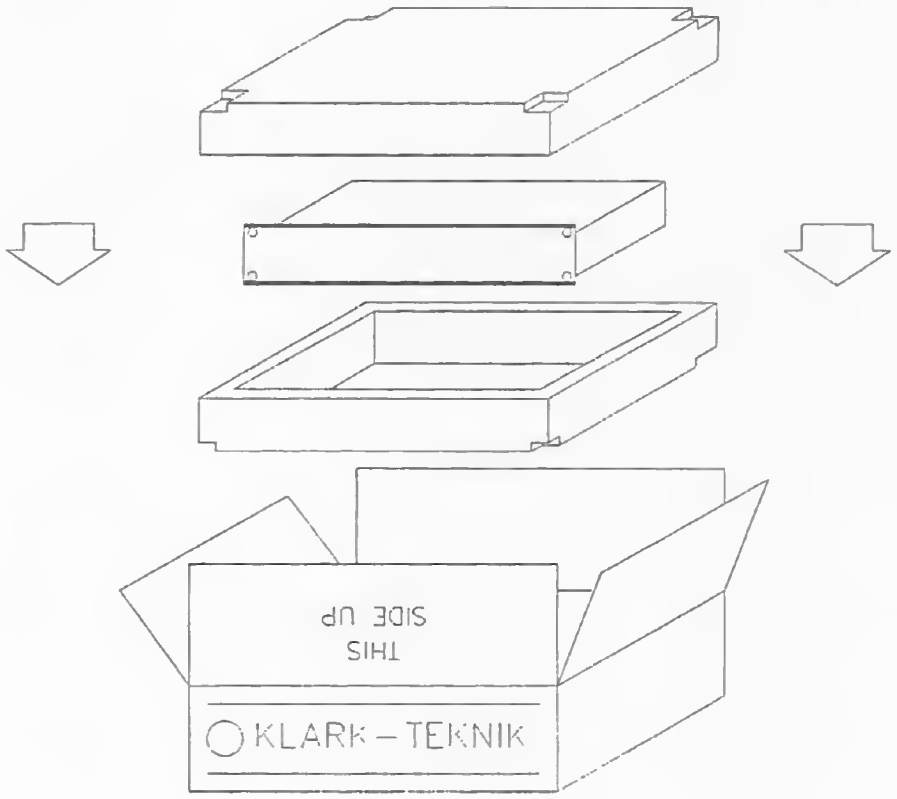

INTRODUCTION

Designed to meet and exceed the needs of the recording, broadcast, installation and live sound industries, the Klark Teknik DN7204 Programmable Delay Line is a high quality, 2-input, 4-output configurable audio delay line that combines state-of-the-art DSP performance with ease of use. Each output may be fed from either input, giving possible configurations of Stereo 1-in, 2-out; two independent 1-in, 2-outs; 1-in, 3 out + 1-in 1-out: 1-in, 4-out. To further extend the flexibility of the Delay line, the unit also incorporates two bands of parametric equalization and a variable high frequency shelf on each output.

The maximum delay time of more than 1400 milliseconds allows total delay compensation of up to 420 meters. The delay time can be set and viewed in milliseconds, meters, centimeters, inches or feet. For these 'distance' modes, a temperature parameter can be set to compensate for environmental variations.

As well as delay and EQ, each output features adjustment of phase and level in the digital domain and an overshoot free peak limiter. The inputs and outputs all feature level trim controls in the analogue domain, for headroom optimization.

The inputs and outputs are fully balanced on XLR connectors and are wired conventionally with pin 1 as ground. Because the system is fully floating, either pin 2 or pin 3 can be designated as hot as long as the same protocol is adhered to for both the input and the output connectors.

IMPORTANT NOTES

Installation
The unit is set at the factory for 90 to 250 volt operation (50-60Hz).
Power connection is made by means of an IEC standard power socket.

The DN7204 is designed for use in both fixed and mobile installations where it can be mounted in a conventional 19" rack occupying just 1U of height. In mobile situations where rough handling is a possibility, it is advisable to support the rear of the unit to prevent undue stress being placed on the front panel. Ensure that the unit has sufficient ventilation and that it is not placed directly over any device that runs hot such as a power amplifier or console power supply. Neither should the unit be exposed to direct sunlight.

Cables:
This product should only be used with high quality, screened, twisted pair audio cables, terminated with metal bodied 3-pin XLR connectors. The cable shield should be connected to pin 1. Any other cable type or configuration for the audio signals may result in degraded performance due to electromagnetic interference.

Protection
CAUTION: LIVE PARTS ARE EXPOSED WHEN THE COVER IS REMOVED. VOLTAGES MAY STILL BE PRESENT WITHIN THE SWITCH MODE PSU EVEN AFTER POWER HAS BEEN REMOVED.

DO NOT EXPOSE THIS EQUIPMENT TO RAIN OR MOISTURE.
REFER SERVICING TO QUALIFIED SERVICE PERSONNEL.

RISQUE DE SHOCK - NE PAS ENLEVER.

WARNING: THIS EQUIPMENT MUST BE EARTHED

If the unit is subjected to extreme fluctuation of temperature, eg from being transported from outside into a heated room, condensation can form. The unit should not be switched on until it has reached room temperature.
Inside the unit there is a battery to maintain the memories and settings when it is switched off. The service life of the battery is approximately 5 years. If the message "Service required, change internal battery" is displayed, contact an authorized Klark Teknik service center.

FRONT PANEL

Input Level Trim & Meter
These controls are used to adjust the incoming signal level to the headroom of the digital system; also to fully attenuate the signal for system troubleshooting. The signal can be boosted by 12dB.
The headroom meter indicates the incoming signal level relative to the maximum level of the digital system without clipping.

Display
The 2 x 16 character Liquid Crystal Display shows the input to output routing in Play mode. In Edit and Options mode it shows the various parameters and their value or status.

OPTION key
This key selects and deselects the Options mode.

STORE key
This key allows the user to Store the current setting in any of 32 non-volatile memory locations.

EDIT key
This key selects and deselects the Edit mode. Parameters are selected using the Select keys and adjusted using the 'Parameter' rotary encoder.

SELECT keys
These keys Select the next or previous parameter in Edit mode, the next or previous option in Options mode or the next or previous memory in Play mode.

PARAMETER rotary encoder
This is used to adjust parameters in Edit mode, to change settings in Options mode and to Select memories in Play mode.

ENTER key
This key is used to recall a selected memory in Play mode.

OUTPUTS 1 to 4 - Rotary controls
These are output attenuators for the 4 outputs. They are used to match the output levels to the maximum or desired input level of the next processor in the signal chain.

Limit LEDs 1 to 4
Each LED lights when the signal level for that output reaches the limiter threshold. The limiters are overshoot free types, with a true $\infty : 1$ ratio.

POWER switch
This switch is used to switch the unit ON and OFF.

REAR PANEL

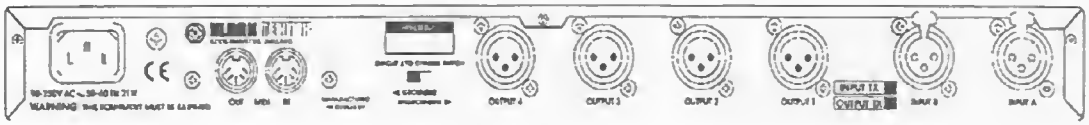

Power Socket
The unit is designed to run from an ac supply, 90 to 250 volts, 50 to 60Hz. The unit must be earthed.

Ground Lift switch
This switch can be used to prevent hum loops. It disconnects circuit ground from chassis earth. When connected to equipment in the same rack the switch is best left in the "grounded position". When used with remotely located equipment, that may have a different earth potential, better results may be achieved by using the "ungrounded" position.

OUTPUTS 1 - 4 XLR sockets
These are electronically balanced for voltage and current.

INPUTS 1 - 2 XLR sockets
These are electronically balanced.

OPERATION

Play mode

At switch on, the unit enters Play mode. The display shows the routing configuration (Stereo, Mono, Dual) and the last recalled memory number.

To recall a memory:

1. Step through the available memories with the Select keys, or scroll through them with the Parameter encoder.
2. Press the Enter key to recall the selected memory.

To change any parameters, enter the Edit mode by pressing the Edit key:

Edit mode

Enter Edit mode by pressing the Edit key. You can also return to Play mode by pressing the Edit key again, or enter Store or Options mode by pressing the Store or Options keys respectively. To Edit parameters:

1. Select parameters from the parameter list by using the Select keys.
2. Adjust the parameters by turning the Parameter encoder.
   CAUTION: Your alterations have not been stored and will be lost next time a program is recalled! A message on the display warns of this condition.
3. If you wish to save your alterations in a memory, press the Store switch. See below.

The first parameter is:

CONFIGURATION This may be Mono (input A to outputs 1, 2, 3, or 4), Stereo (input A to outputs 1 and 2; input B to outputs 3 and 4) or Dual (each output fed from either input). The configuration setting affects which parameters are available in the list:

Configuration:		
Mono	**Stereo**	**Dual**
EDIT Delay Unit	EDIT Delay Unit	EDIT Delay Unit
EDIT Temperature‡	EDIT Temperature‡	EDIT Temperature‡
Parameter		
EDITA Master Del	EDIT Master Del	EDITA Master Del
		EDITB Master Del
List:†		
EDIT① Delay	EDIT①&③ Delay	EDIT① Input
EDIT① Level	EDIT①&③ Level	EDIT① Delay
EDIT① Phase	EDIT①&③ Phase	EDIT① Level
EDIT① Limit Thr	EDIT①&③ Limit Thr	EDIT① Phase
EDIT① PEQ 1: Frq	EDIT①&③ PEQ 1: F	EDIT① Limit Thr
EDIT① PEQ 1: Q	EDIT①&③ PEQ 1: Q	EDIT① PEQ 1: Frq
EDIT① PEQ 1: Gn	EDIT①&③ PEQ 1: G	EDIT① PEQ 1: Q
EDIT① PEQ 2: Frq	EDIT①&③ PEQ 2: F	EDIT① PEQ 1: Gn
EDIT① PEQ 2: Q	EDIT①&③ PEQ 2: Q	EDIT① PEQ 2: Frq
EDIT① PEQ 2: Gn	EDIT①&③ PEQ 2: G	EDIT① PEQ 2: Q
EDIT① Shelf: Frq	EDIT①&③ Shelf: F	EDIT① PEQ 2: Gn
EDIT① Shelf: Gn	EDIT①&③ Shelf: G	EDIT① Shelf: Frq
EDIT② Delay	EDIT②&④ Delay	EDIT① Shelf: Gn

EDIT② Level
EDIT② Phase
EDIT② Limit Thr
EDIT② PEQ 1: Frq
EDIT② PEQ 1: Q
EDIT② PEQ 1: Gn
EDIT② PEQ 2: Frq
EDIT② PEQ 2: Q
EDIT② PEQ 2: Gn
EDIT② Shelf: Frq
EDIT② Shelf: Gn
EDIT③ Delay
EDIT③ Level
EDIT③ Phase
EDIT③ Limit Thr
EDIT③ PEQ 1: Frq
EDIT③ PEQ 1: Q
EDIT③ PEQ 1: Gn
EDIT③ PEQ 2: Frq
EDIT③ PEQ 2: Q
EDIT③ PEQ 2: Gn
EDIT③ Shelf: Frq
EDIT③ Shelf: Gn
EDIT④ Delay
EDIT④ Level
EDIT④ Phase
EDIT④ Limit Thr
EDIT④ PEQ 1: Frq
EDIT④ PEQ 1: Q
EDIT④ PEQ 1: Gn
EDIT④ PEQ 2: Frq
EDIT④ PEQ 2: Q
EDIT④ PEQ 2: Gn
EDIT④ Shelf: Frq
EDIT④ Shelf: Gn

EDIT②&④ Level
EDIT②&④ Phase
EDIT②&④ Limit Thr
EDIT②&④ PEQ 1: F
EDIT②&④ PEQ 1: Q
EDIT②&④ PEQ 1: G
EDIT②&④ PEQ 2: F
EDIT②&④ PEQ 2: Q
EDIT②&④ PEQ 2: G
EDIT②&④ Shelf: F
EDIT②&④ Shelf: G

EDIT② Input
EDIT② Delay
EDIT② Level
EDIT② Phase
EDIT② Limit Thr
EDIT② PEQ 1: Frq
EDIT② PEQ 1: Q
EDIT② PEQ 1: Gn
EDIT② PEQ 2: Frq
EDIT② PEQ 2: Q
EDIT② PEQ 2: Gn
EDIT② Shelf: Frq
EDIT② Shelf: Gn
EDIT③ Input
EDIT③ Delay
EDIT③ Level
EDIT③ Phase
EDIT③ Limit Thr
EDIT③ PEQ 1: Frq
EDIT③ PEQ 1: Q
EDIT③ PEQ 1: Gn
EDIT③ PEQ 2: Frq
EDIT③ PEQ 2: Q
EDIT③ PEQ 2: Gn
EDIT③ Shelf: Frq
EDIT③ Shelf: Gn
EDIT④ Input
EDIT④ Delay
EDIT④ Level
EDIT④ Phase
EDIT④ Limit Thr
EDIT④ PEQ 1: Frq
EDIT④ PEQ 1: Q
EDIT④ PEQ 1: Gn
EDIT④ PEQ 2: Frq
EDIT④ PEQ 2: Q
EDIT④ PEQ 2: Gn
EDIT④ Shelf: Frq
EDIT④ Shelf: Gn

†Note: The parameters are listed here in 'Output Priority' order. The order of parameters in the list changes for 'Parameter Priority'. See 'Options' mode.
‡Note: The Temperature parameter is only available in 'distance' mode, ie when delay units are meters, centimeters, inches or feet.

Parameter types and ranges:

Temperature‡ The ambient air temperature of the space to be compensated for. This temperature is used for conversion of distance (meters, centimeters, inches or feet) to time (milliseconds).
Range: 0°C to 40°C in 1° steps.

Master Delay The basic delay time from an input to all its outputs. The total delay time from input to output is Master Delay for that input plus Delay for that output.
Range: 0 to 1400 milliseconds.

O Delay The delay for output number O.
Range: 0 to 1400 milliseconds.

O Level The output level for output number O.
Range: +12dB to -24dB in 1dB steps, plus 'Mute'.

O Phase The relative phase shift for output number O.
Range: Inverted / Not inverted.

O PEQ 1: Frq Frequency of parametric EQ 1 for output number O.
Range: 20Hz to 20kHz

O PEQ 1: Gn Gain of parametric EQ 1 for output number O.
Range: -12dB to +12dB in 1dB steps.

O PEQ 1: Q Q of parametric EQ 1 for output number O.
Range: 3 octaves to 0.08 octaves

O PEQ 2: Frq Frequency of parametric EQ 2 for output number O.
Range: 20Hz to 20kHz

O PEQ 2: Gn Gain of parametric EQ 2 for output number O.
Range: -12dB to +12dB in 1dB steps.

O PEQ 2: Q Q of parametric EQ 2 for output number O.
Range: 3 octaves to 0.08 octaves

OShelf: Frq Frequency of high-frequency shelf EQ for output number O.
Range: 100Hz to 16kHz

O Shelf: Gn Gain of high-frequency shelf EQ for output number O.
Range: -12dB to +12dB in 1dB steps.

○ **Lim Thresh:** Threshold for the Peak Limiter on output number ○. The limiter allows no overshoot, has a true ∞ : 1 ratio and instantaneous attack and release phases. It is placed in the signal chain after all equalization and level controls. The limiter threshold can be set in units of dBu or volts, referenced to the output level. In both cases, it is assumed that the output attenuators are set at zero.

Delay Unit Units for the Delay parameters.
Range: milliseconds, meters, centimeters, inches or feet

Store mode

To save an edited program, or to copy a program from one location to another:

1. Press the Store switch to enter Store mode from any other.
2. The display now shows the current memory number and the destination memory number.
3. If you wish, use the rotary encoder to change the destination memory number.
4. Press the enter switch to initiate the Store.
   Note: Up to this point, the Store process can be canceled by pressing any other switch, ie Edit or Options.
5. Press the Store switch to confirm the Store and exit the Store mode.

Options mode

Use the Select switches to select Options. Use the rotary encoder to adjust them:

LCD Contrast

Rotate the encoder to adjust the LCD contrast/viewing angle.

Output Priority/Parameter Priority

Rotate the encoder to change the order of the Edit parameter list.
Output Priority: Parameters are grouped by output, as listed above.
Parameter Priority: Parameters are grouped by type, ie delay times for all outputs grouped together; level adjustment for all outputs grouped together.

Lock/Unlock

To lock the unit, preventing unauthorized adjustment of parameters and memory recall:

1. Rotate the encoder to dial in your chosen 3 digit code number.
2. Press the enter switch.
   CAUTION! Do not forget your code number! If the code number is lost, the unit can only be unlocked after contacting the Klark Teknik factory!

To unlock the unit:

1. Rotate the encoder to dial in your chosen 3 digit code number.
2. Press the enter switch.

MIDI Channel

Rotate the encoder to select one of MIDI channels 1 to 16, OMNI or OFF.
The DN7204 will transmit and receive MIDI program change messages on the specified channel. In Omni mode, transmission is on channel 1.

Limiter threshold

The threshold for the output peak limiters can be set in units of dBu or volts. Rotate the encoder to select either dBu or volts.

SPECIFICATIONS

INPUTS	**TWO**
Type	Balanced (electronically)
Impedance (ohm)	
Balanced	20k
Unbalanced	10k
Common mode rejection (1KHz)	>70dB
Max. level	+21dBu
Insertion loss of optional transformers	1.5dB
Analogue Gain	-∞ to +12dB
OUTPUTS	**FOUR**
Type	Balanced (electronically)
Min. load impedance	600ohm
Source impedance	50ohm
Max. level	+21dBu into >2kohms
Gain	-∞ to 0dB
PERFORMANCE	
Frequency response with EQ flat	+/-0.3dB (20Hz to 20kHz)
Distortion @ +4dBu	<0.02% (20Hz to 20KHz)
With optional input transformer	<0.1% (500Hz to 20KHz)
	<0.5% (20Hz to 500Hz)
Dynamic range (20Hz to 20kHz unweighted)	> 100dB
POWER REQUIREMENTS	
Voltage	90 to 250v @ 50 to 60Hz AC
Consumption	<25VA
DIMENSIONS	
Width	483mm (19 inches)
Height	43.6mm (1.75 inches)
Depth	295mm (11.6 inches)
WEIGHT	
Net	4kg
Shipping	6kg

DN7204 BLOCK DIAGRAM

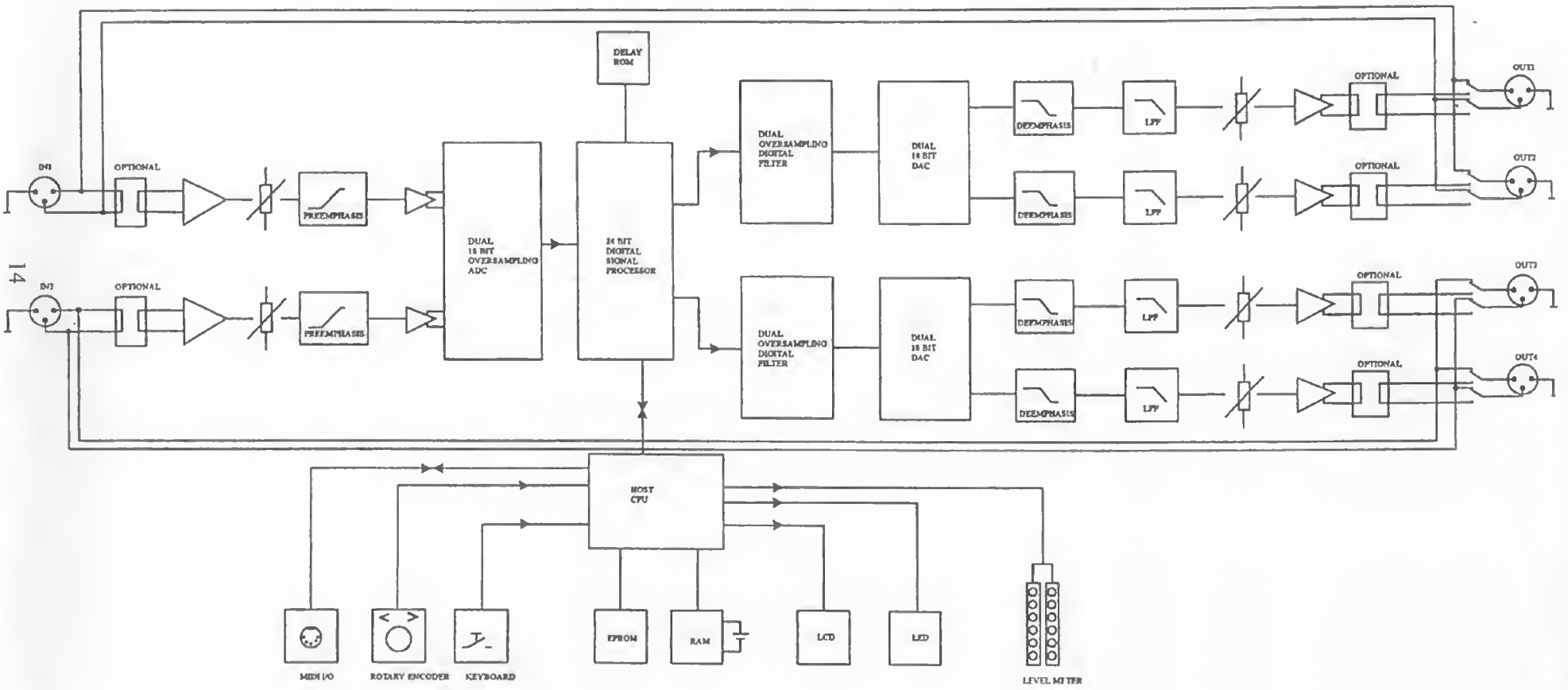

SERVICE INFORMATION

TEST PROGRAMS

The DN7204 software includes test programs to check internal function blocks.

This test mode may be accessed by pressing the 'EDIT' and 'OPTION' keys simultaneously when switching the unit on.

The following massage appears briefly on the display:

TEST MODULE FOR SERVICE ONLY

The test programs can then be selected successively by means of the 'SELECT' keys or the rotary encoder. Once selected the test may be started by pressing the 'ENTER' key, the 'ENTER' key also serves to abort the test.

The test mode is exited by the program called:

QUIT START = ENTER

Available Test Programs:

- Microprocessor ROM Test
- Microprocessor RAM Test
- DSP RAM Test
- Battery Test
- MIDI Test
- LED Test
- Display Test
- Key Test
- Encoder Test
- A/D Adjust
- Original Through
- Sine Wave Output
- Quit

MICROPROCESSOR ROM TEST

```
uP - ROM TEST
START = ENTER
```

When 'ENTER' is pressed the display shows:

```
Testing uP - ROM
......
```

The EPROM's of the host processor are checked. A check sum is calculated from the entire contents or the EPROM . The test cannot be interrupted. If no error is found the display shows:

```
uP - ROM TEST OK
<<  >>
```

If an error is detected the following appears:

```
uP-ROM TEST FAIL
<<Check: XXh>>
```

MICROPROCESSOR RAM TEST

```
uP - RAM TEST
START = ENTER
```

This program tests the SRAM in the DN7204 processor system. To do so, various bit patterns are written into all RAM addresses and re-read.

WARNING! All data in the RAM will be lost during this test!

When 'ENTER' is pressed the following massage appears on the display:

```
Warning: Data in
RAM will be lost
```

MICROPROCESSOR RAM TEST Cont..

By pressing 'ENTER' again the test program is started and the following message appears on the display:

```
Testing uP - RAM
.....
```

The test cannot be interrupted! If no error is found, the following message appears on the display:

```
uP - RAM TEST OK
<<   >>
```

If an error is detected in the data bus, the faulty line is displayed:

```
uP - RAM TEST FAIL
<< at D XX >>
```

If an address error occurs, the display shows the first RAM address where a write/read error occurred:

```
uP - RAM TEST FAIL
<< at XXXh >>
```

DSP - RAM TEST

```
DSP - RAM TEST FAIL
START = ENTER
```

This program tests the delay memory in the DN7204. After pressing the 'ENTER' key the data and address busses from the DSP to RAM are checked. The display shows:

```
Testing DSP - RAM
.....
```

If no error is found, the display shows:

```
DSP - RAM TEST OK
<<   >>
```

If an error is detected, the faulty data or address line is displayed:

DSP - RAM TEST FAIL AT D XX

Now the test can be continued by pressing any key except 'SELECT' and 'ENTER'. The test is aborted by pressing the 'SELECT' or 'ENTER' key.

BATTERY TEST

BATTERY TEST START = ENTER

The DN7204 incorporates a lithium battery to supply the SRAM with the necessary power when the unit is switched off. The battery voltage is constantly monitored by the unit and can be indicated on the display in this test. After the program has been called up via 'ENTER', the following message appears in the display:

Testing BATTERY U: 3.0V

The test can also be aborted via 'ENTER' and then the following message appears on the display:

BATT. TEST OK << >>

If the battery voltage drops below 2.5v the following error message is displayed:

BATT. TEST FAILED << >>

The battery should then be changed as soon as possible.

MIDI TEST

MIDI TEST START = ENTER

This program checks the MIDI interface in the DN7204. The MIDI IN and MIDI OUT sockets must be connected by a midi cable. After pressing 'ENTER' the display shows:

Testing MIDI

If the connection between in and out is OK, the test is finished with the message:

MIDI TEST OK << >>

If the transmitted data is not received, the following message appears:

NO MIDI RECIEVED

The test is then aborted with the message:

MIDI TEST - FAILED << >>

LED TEST

LED TEST START = ENTER

This program serves to check all the LED's on the front panel. After pressing 'ENTER' the following appears in the display:

TESTING LEDs

The test starts with individual triggering of the status LED's. Then all LED segments are switched on. The program ends automatically and the display shows.

LED TEST done

DISPLAY TEST

DISPLAY TEST START = ENTER

This program serves to check the LCD display and contrast settings. After the program has started, the LCD shows a pattern. This is so the user can check all the pixels are being activated and are working properly. The following appears on the display:

LCD CONTRAST: - - - 0 - - -

With the rotary encoder the display contrast can be adjusted between -10 to +10. The test is exited via the 'ENTER' key and the following appears on the display:

DISP. TEST done << >>

The contrast value set is maintained even when the unit is switched off.

KEY TEST

KEY TEST START = ENTER

This program checks the keyboard of the DN7204. When enter is pressed the following appears on the display:

Press all Keys

If a key is pressed the key designation appears in the second line accordingly. After all the keys have been activated successfully the display shows:

KEY TEST OK << >>

The key test can be aborted at any time via 'ENTER'.

ENCODER TEST

ENCODER TEST START = ENTER

This program checks the operation of the rotary encoder. When 'ENTER' is pressed the following appears in the display:

TURN ENCODER

If the encoder is rotated, the direction of the counter pulses are shown in the second line. One full rotation complies with 30 pulses. Pressing 'ENTER' will terminate the program and the following appears in the display:

ENC. TEST DONE << >>

A/D ADJUST

A/D ADJUST START = ENTER

This test allows the DC offset of the A/D converters to be set. When 'ENTER' is pressed the display shows a 6 digit positive or negative value for each input channel:

CH1 AD-TEST CH2 +000000 -000000

Both channels must be adjusted to 0 with the pre-sets R119 (CH1) and R219 (CH2). The test is terminated by 'ENTER' and the display shows:

A/D ADJUST done << >>

NOTE: For correct adjustment it is necessary that the unit is switched on for some time in order to bring the internal components to operating temperature.

ORIGINAL THROUGH

ORIGINAL THRU START = ENTER

With this program the input data of the DSP is passed through directly to the outputs. No additional signal processing is performed. The inputs and outputs are configured, input 1 goes to outputs 1 & 2, input 2 goes to outputs 3 & 4. The display shows:

ORIGINAL thru Level: 0 dB

With the rotary encoder a level between 0 an -99 dB can be set. The test is terminated by 'ENTER' and the display shows:

THRU TEST done << >>

SINE WAVE OUT

SINE WAVE OUT START = ENTER

This test checks the complete signal path post DSP (digital filters, D/A converters, output channels). After pressing the 'ENTER' key the DSP generates a sine wave and feeds it to all 4 channels:

SINE Wave 250Hz Level: -24dB

With the rotary encoder a level between 0 and -99dB can be set. The test is terminated by 'ENTER' and the display shows:

SINE TEST done << >>

DN7204 Board Layout Overview

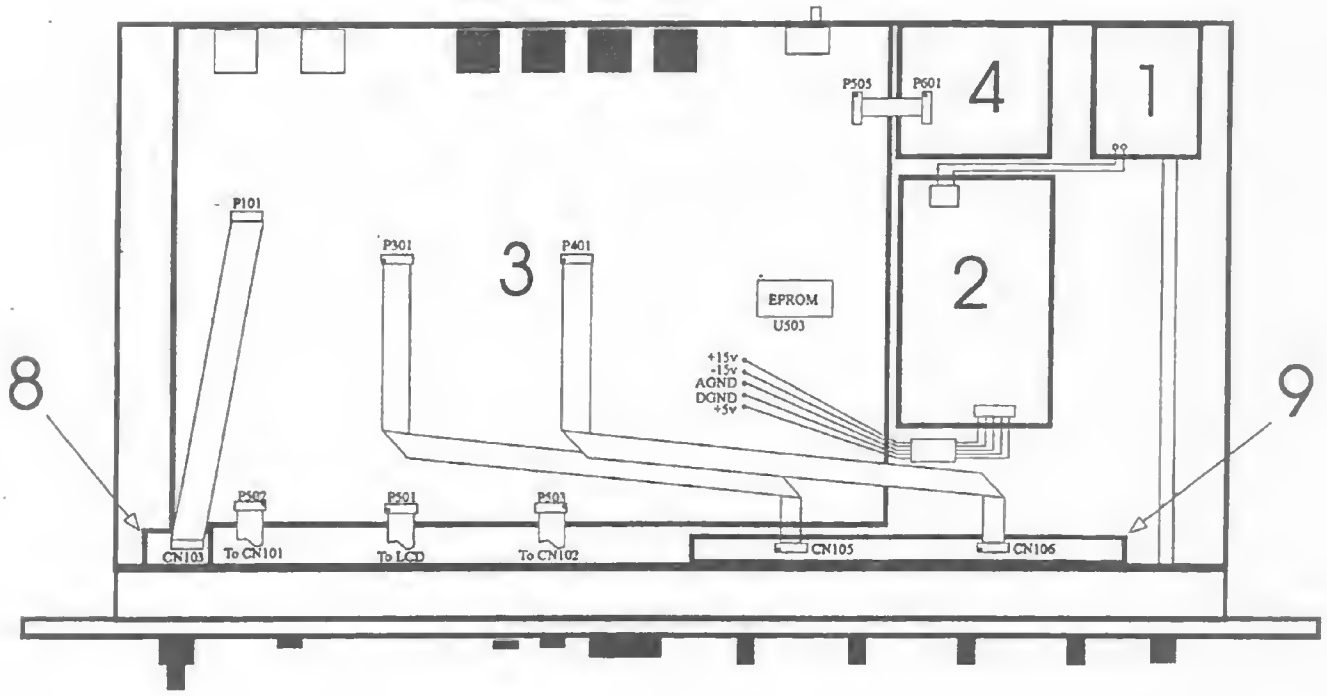

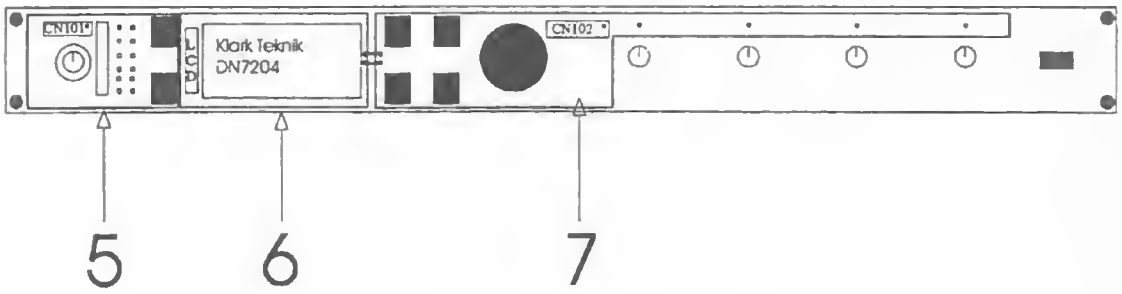

1 - PSU FILTER BOARD
2 - SWITCH MODE POWER SUPPLY
3 - MAIN BOARD
4 - MIDI BOARD
5 - FRONT PANEL METER BOARD
6 - FRONT PANEL LCD DISPLAY
7 - FRONT PANEL SWITCH BOARD
8 - INPUT LEVEL POT MOUNTING BOARD
9 - OUTPUT LEVEL POT MOUNTING BOARD

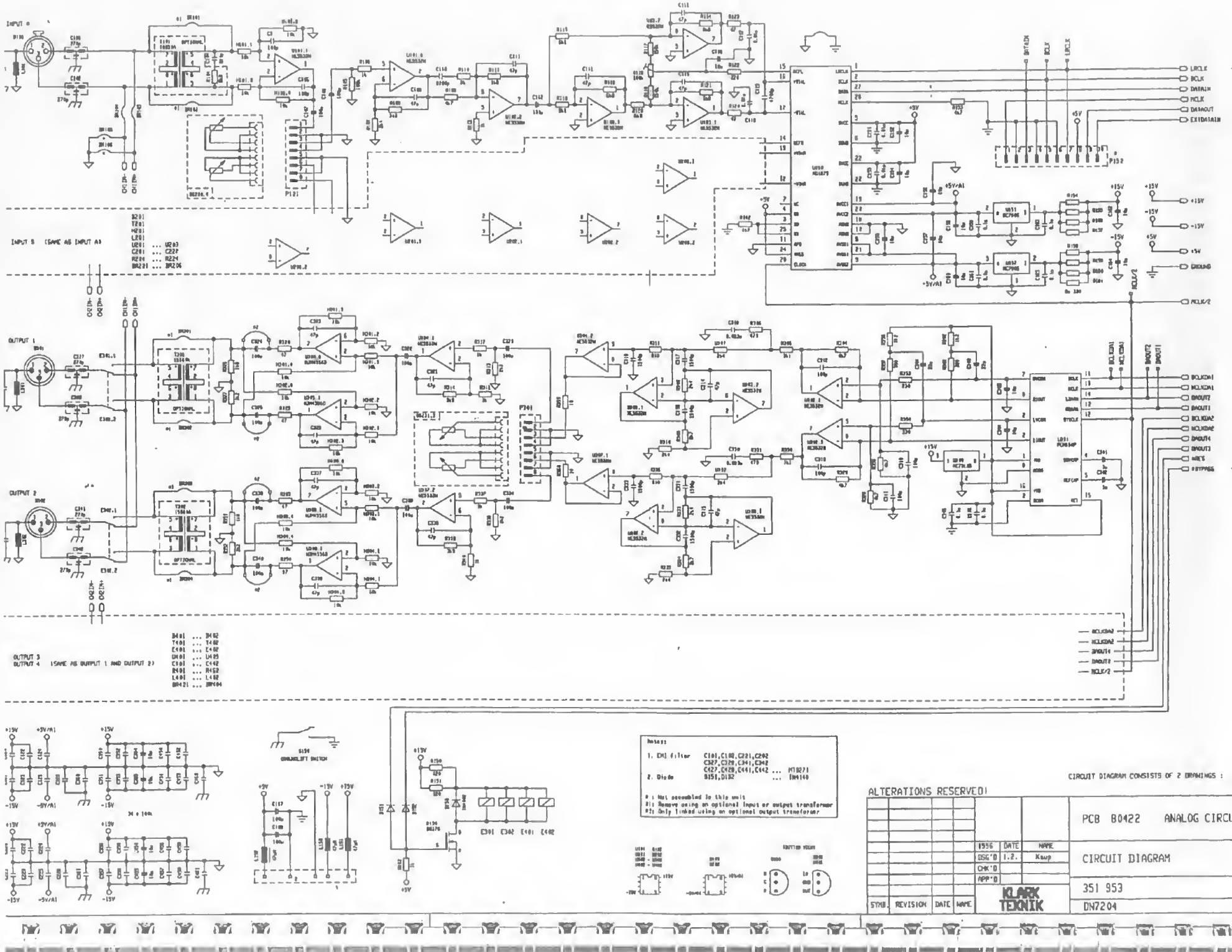
INPUT 5 (SAME AS INPUT A)
OUTPUT 1
OUTPUT 2
OUTPUT 3
OUTPUT 4 (SAME AS OUTPUT 1 AND OUTPUT 2)
LRCLK
BCLK
DATAIN
MCLK
DATAOUT
EXTDATAIN
+15V
-15V
+5V
GROUND
MCLK/2
BCLKDA1
MCLKDA1
DAOUT2
DAOUT1
BCLKDA2
MCLKDA2
DAOUT4
DAOUT3
WRES
BYPASS
Notes:
1. EMI filter C101,C102,C221,C202
C327,C328,C341,C342
C427,C428,C441,C442 ... MT8271
2. Diode S151,D152 ... IN4148
* : Not assembled in this unit
#1: Remove using an optional input or output transformer
#2: Only linked using an optional output transformer
CIRCUIT DIAGRAM CONSISTS OF 2 DRAWINGS : 351
351
ALTERATIONS RESERVED!
PCB 80422 ANALOG CIRCUIT
1996 DATE NAME
DSG'D 1.2. Kaup
CHK'D
APP'D
CIRCUIT DIAGRAM
351 953
DN7204
SYMB. REVISION DATE NAME
KLARK TEKNIK

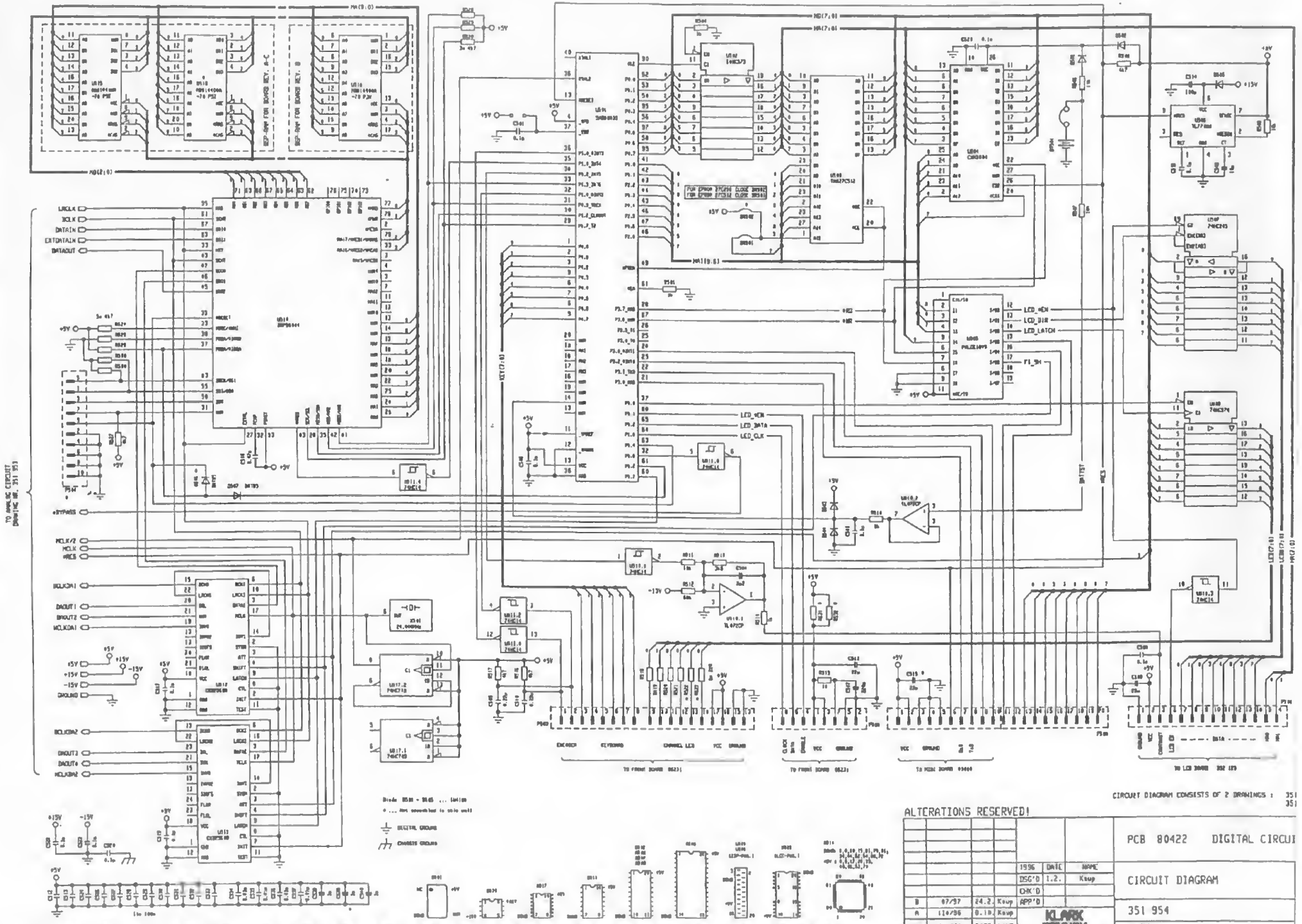
CIRCUIT DIAGRAM CONSISTS OF 2 DRAWINGS : 351
351
ALTERATIONS RESERVED!
PCB 80422 DIGITAL CIRCUI
CIRCUIT DIAGRAM
351 954
1996 DATE NAME
DSG'D 1.2. Kaup
CHK'D
APP'D
B 07/97 24.2. Kaup
A 11/96 0.10. Kaup
SYMB. REVISION DATE NAME
KLARK TEKNIK
DIGITAL GROUND
CHASSIS GROUND
TO ANALOG CIRCUIT DRAWING NR. 351 953
LRCLK
BCLK
DATAIN
EXTDATAIN
DATAOUT
+BYPASS
MCLK/2
MCLK
+RES
BCLKDA1
DAOUT1
DAOUT2
MCLKDA1
+5V
+15V
-15V
GROUND
BCLKDA2
DAOUT3
DAOUT4
MCLKDA2
LED_WEN
LED_DIR
LED_LATCH
LED_CLK
LED_DATA
FI_SH
KEY(7:0)
MA(9:0)
MD(7:0)
MA(7:0)
MA(9:6)
MD(2:0)
LED(7:0)
LED(8:0)
MA(7:0)
BATTST
+RES
ENCODER
KEYBOARD
CHANNEL LED
VCC
GROUND
TO FRONT BOARD 8623
TO MIDI BOARD 8644
TO LED BOARD 352 129

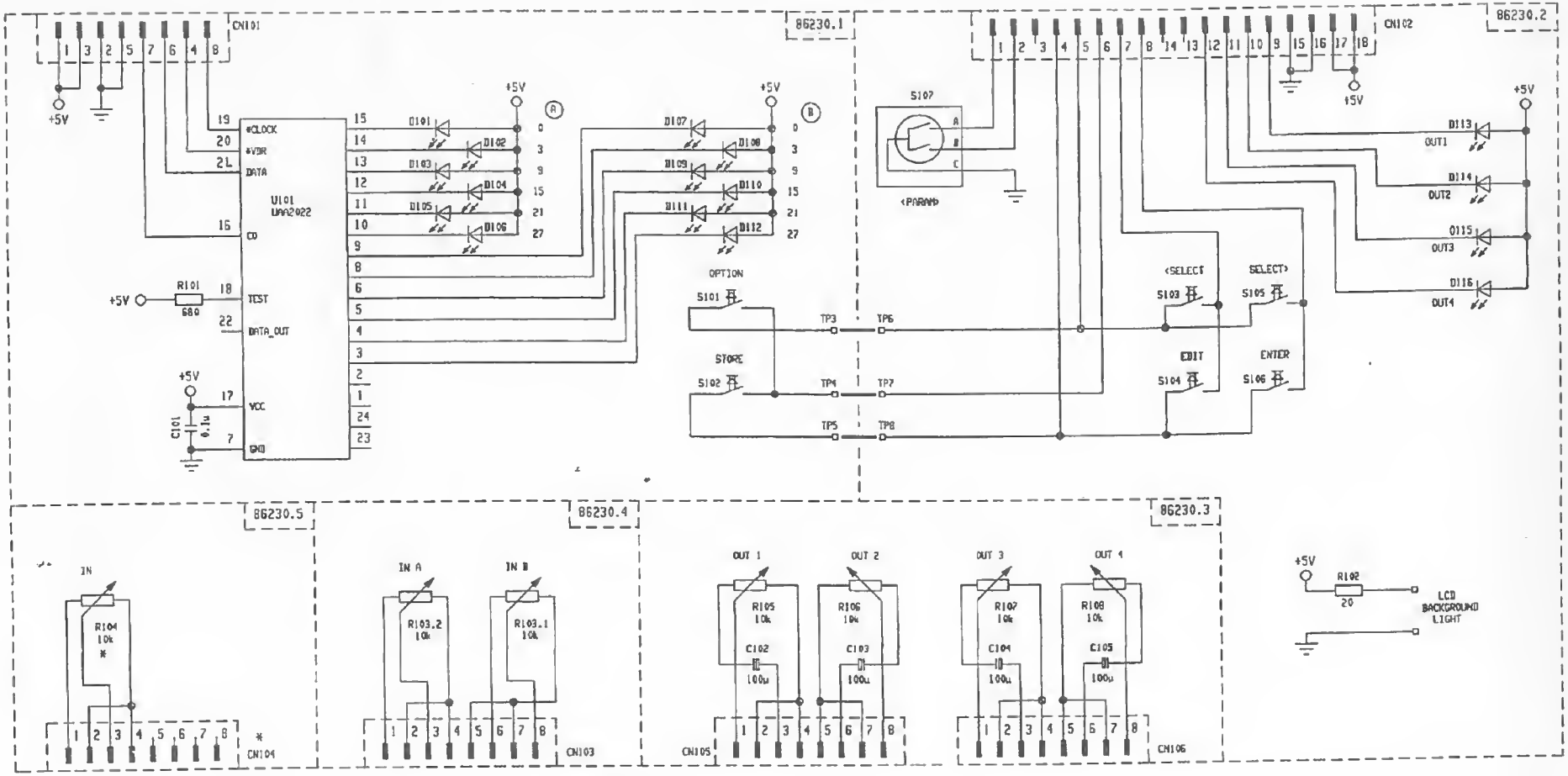

* NOT FITTED

ALTERATIONS RESERVED!

SYMB	REVISION	DATE	NAME

	DATE	NAME
1995		
DSG'D	19.12	Kaup
CHK'D		
APP'D		

KLARK TEKNIK

FRONT BOARD 86231 (B2892)

CIRCUIT DIAGRAM

351 868

DN 7204

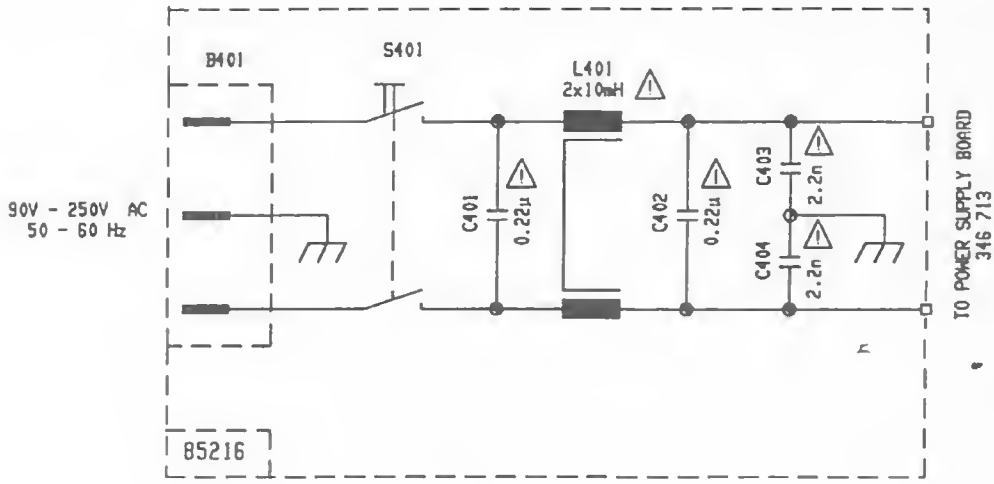

⚠ SAFETY COMPONENT
(MUST BE REPLACED BY ORIGINAL PART)

ALTERATIONS RESERVED!

SYMB.	REVISION	DATE	NAME

	DATE	NAME
1992		
DSG'D	16.03	Kaup
CHK'D	06.05	Kaup
APP'D		

KLARK TEKNIK

LINE FILTER 85216

CIRCUIT DIAGRAM

344 859

DN7103 / DN7204

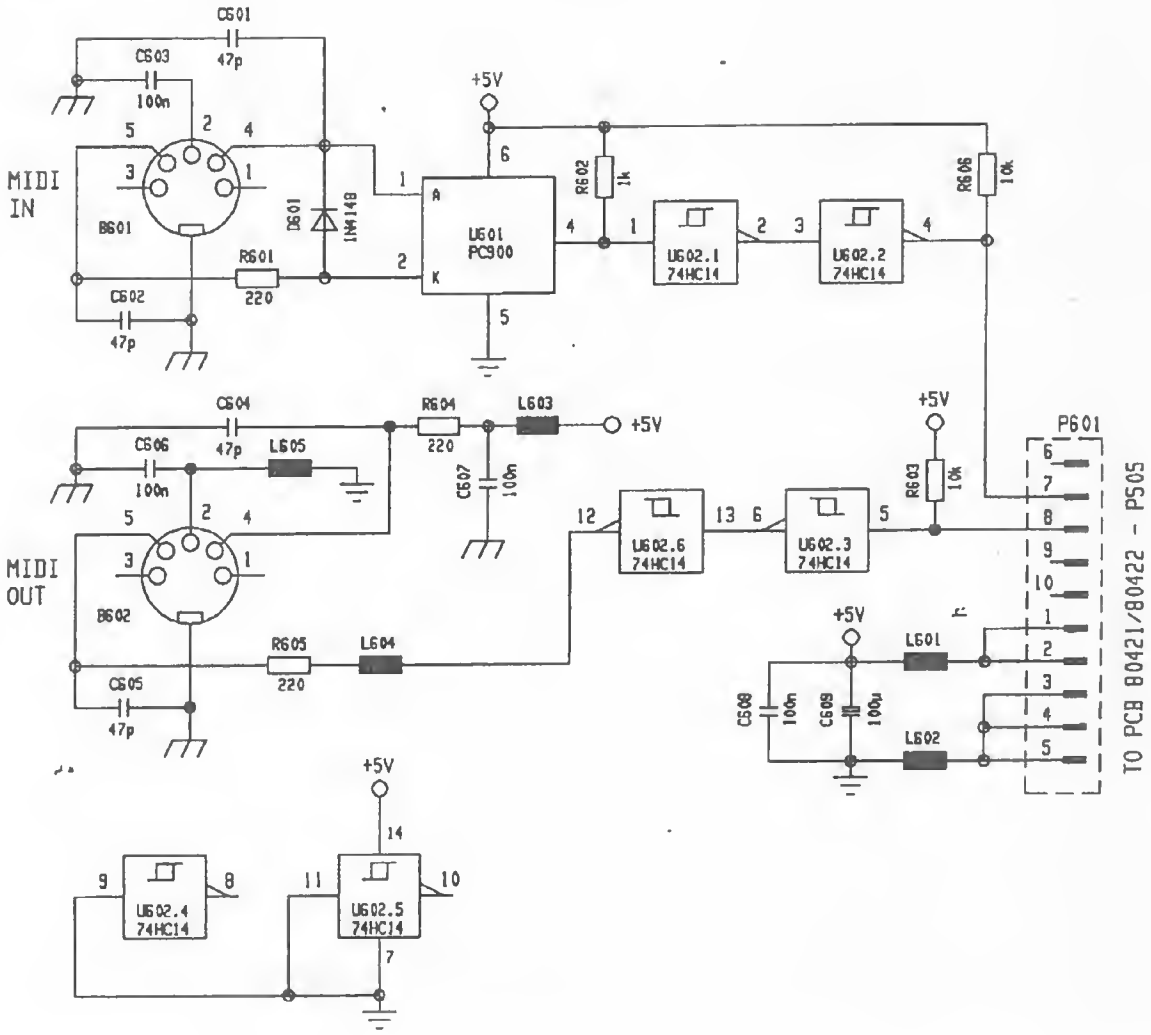

ALTERATIONS RESERVED!

SYMB	REVISION	DATE	NAME

	DATE	NAME
1997		
DSG'D	24.2.	Kaup
CHK'D		
APP'D		

KLARK TEKNIK

MIDI BOARD 83099

CIRCUIT DIAGRAM

348 752

DN7102 / DN7204